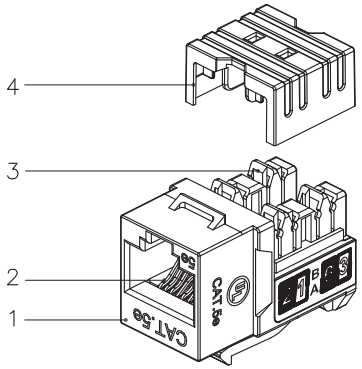

SCALE 1/1

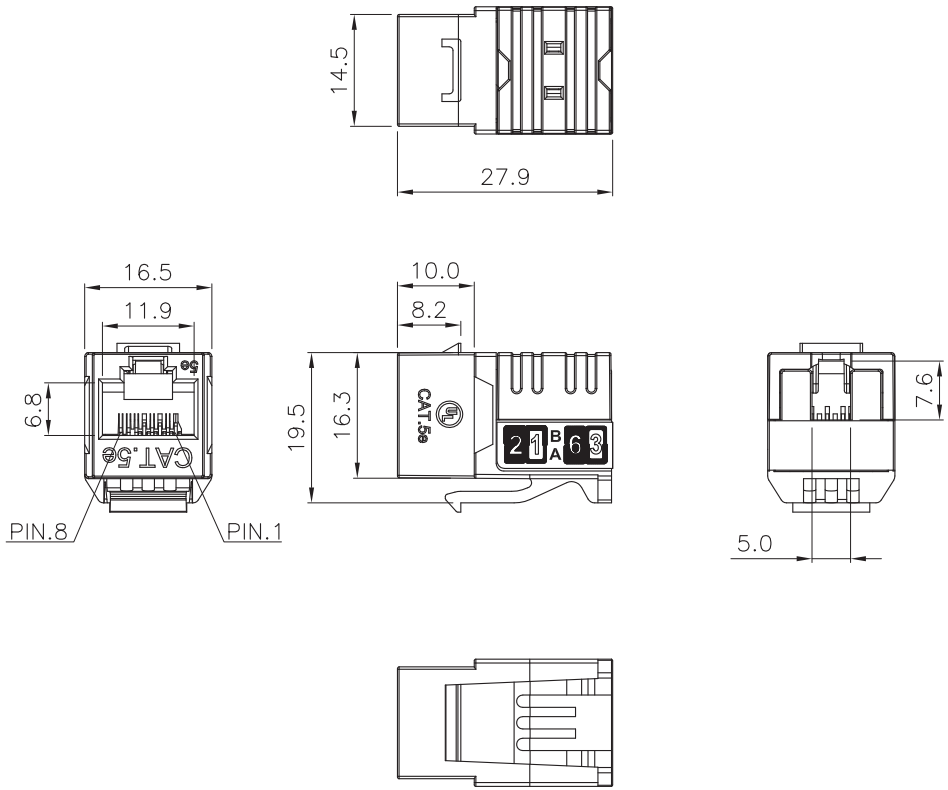

Specification :

Material :
1. RJ45 Jack :
   1-1. Housing : ABS+PC UL 94V-0, with optional color.
   1-2. Contact Bracket : PBT+Glass Fiber, UL 94V-0.
2. RJ45 Jack Contact :
   2-1. Material : Phosphor Bronze with Nickel plated.
   2-2. Finish : 50 micro-inch Gold plated on Plug contact area.
3. IDC :
   3-1. Housing : PC UL 94V-2, with White color.
   3-2. Terminal : Phosphor Bronze with Tin plated.
4. IDC Cap : ABS+PC UL 94V-0, with Black color.
5. PCB : FR4, UL 94V-0.

Performance :
a. T568A & T568B wiring.
b. Insertion Force : 20N max.(IEC 60603-7-4)
c. Retention Strength : 7.7 kg between Jack and Plug.
d. Operating Temperature : -10°C to 60°C.(ISO/IEC 11801, ANSI/TIA 568 C.2)
e. Life(mating cycles) :
   e-1. Jack : 750 cycles min.(ISO/IEC 11801, IEC 60603-7-4)
   e-2. IDC : Suitable for 23-26 AWG stranded and solid wire, compatible with 110 punch down tool.
f. The Cat.5e transmission performance is in compliance with the ANSI/TIA 568 C.2 standard.

JE 應用工程
2016.06.14
發行

Remark : AADCE01113010XX
(1)

(1)XX : Housing Color
01=Black, 02=Gray(RAL7030), 03=Red(RAL3003), 05=White(RAL9003),
06=Yellow(RAL1018), 07=Blue(RAL5012), 08=Green(RAL6016),
09=Orange(RAL2012), 13=Ivory(RAL1014).

GENERAL TOLERANCE OF DIMENSIONS X.XXX ±0.005 X.XX ±0.05 X.X ±0.1	DRAWING	14.JUN.2016	LOVE	CT TECH
	CHECK	14.JUN.2016	DAY	
	APPROVAL	14.JUN.2016	JAIMY	
		DATE	NAME	ITEM NO.: AADCE01113010XX
	SCALE 1/1 (A4)	UNIT	mm	DES.: CE UNSHIELDED KEYSTONE JACK
	DRAWING NO.	AADCE01113010XX KJ38-CE-US-XX(SA2)		A2
	DRAWING CLASSIFICATION	S	SHEET 1 OF 1	